Stonedecks Installation Manual 2023

Rainier Collection

Tanzite
STONEDECKS

Introduction 3

How to build a Deck

Foundation 5

Ledger Board 5

Post and Beam 6

Plywood 7

Steps & Sides 8

Water Protections 9

Tanzite Stones 12

Railing 13

Polymeric Sand & Self-leveling Caulking 14

How to Cover Existing Deck 15

How to Install on the Ground 20

How to Cover Existing Concrete 22

Maintenance 25

Warranty 26

Product Specifications 31

Technical data 34

Deck Framing Guide 36

Last Updated June 8, 2023

INTRODUCTION

DECK DIMENSION CALCULATOR

The deck can of course be made to any measurement, however, this chart is an easy guide to follow in order to build the deck structure so that you can minimize cuts to the Tanzite stones. This chart assumes you will be skirting the sides of the deck with a 10mm thick product like Hardie Board. Note that the deck width is different then the deck depth,w adjusting so that perimeter stones are not used on one side, assuming that side is against the house.

Stone Tiles

Desired dimension (actual)	7' (2116)	8' (2420)	9' (2724)	10' (3028)	11' (3332)	12' (3636)	13' (3940)	14' (4244)	15' (4548)	16' (4852)
Structure width	2040	2344	2648	2952	3256	3560	3864	4168	4472	4776
Structure depth	2084	2388	2692	2996	3300	3604	3908	4212	4516	4820

All dimensions are shown in millimeters unless otherwise stated.

Wood Tiles

Desired dimension (actual)	7' (2140)	8' (2344)	9' (2752)	10' (2956)	11' (3364)	12' (3568)	13' (3976)	14' (4180)	15' (4588)	16' (4792)
Structure depth	2104	2308	2716	2920	3328	3532	3940	4144	4552	4756

Here is a handy formula to cut the perfect stair stringer, all measurements are in millimeters.
A= Distance from the top of the finished stone height of the deck to the ground that stairs will rest on.
B= Number of steps (round up to the nearest whole number).
C= Step tread/run.
D= The thickness of what you will cover the vertical sides (risers) of the stairs with.
E= Step rise.

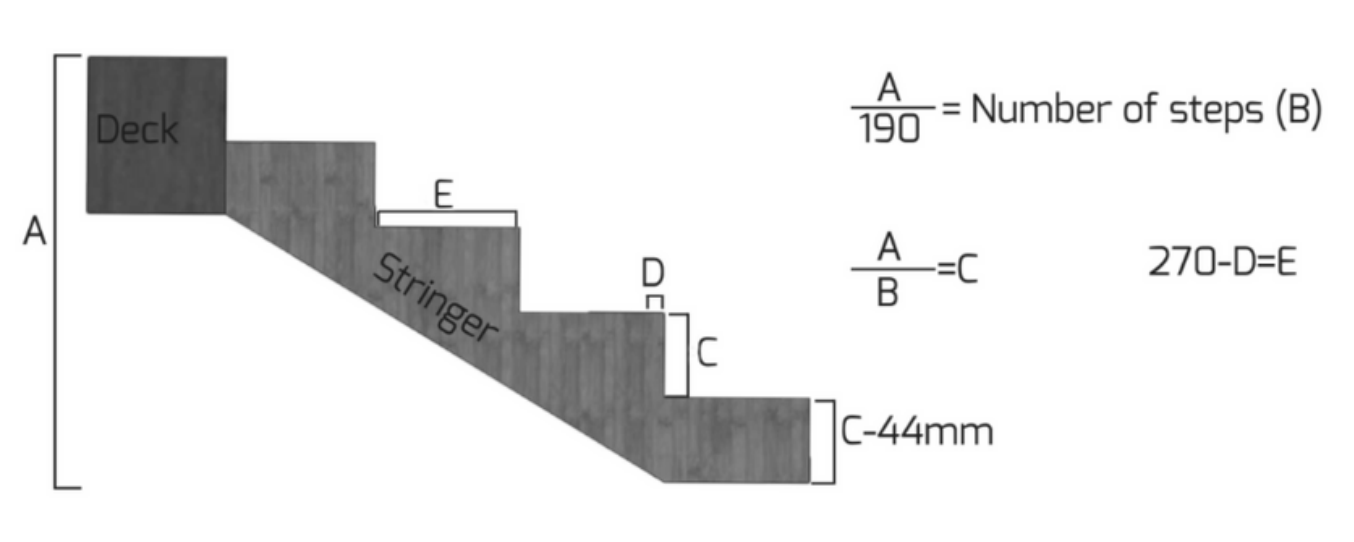

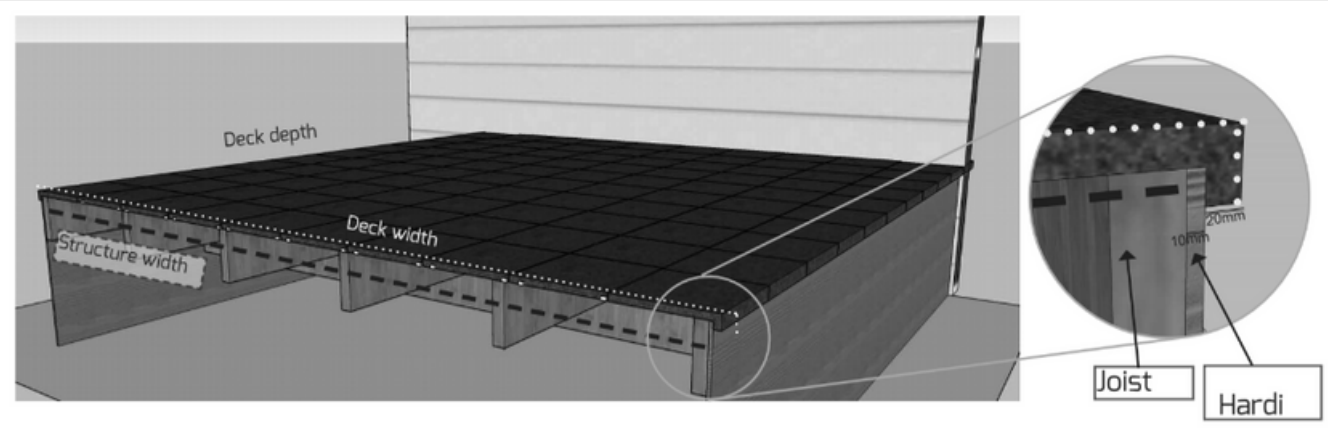

Building stairs without needing to cut the Tanzite will make them quicker to build. To achieve this, assuming you will install a 10mm siding (like Hardie Board), it is ideal if the stairs can be a width that is a multiple of 298 millimeters. Then make the wood stair structure 38 millimeters less if one corner stone is used; or 76 millimeters less if two corner stones are used. The depth of the step structure should always be 260 millimeters.

For wood stairs the ideal width would begin at 896mm if one corner stone is used, and 1194 if two corners are used. Both 896mm and 1194mm can be increased by increments of 598mm to avoid cutting Tanzite pieces. Again, reduce the structure 38 millimeters per corner stone used. The depth of the step structure should always be 260 millimeters for wood colors.

Tanzite STONEDECKS

Foundation:

Tanzite StoneDecks are flexible so there are many foundations that can work well; such as, concrete pads, concrete piles, and engineered screw piles. One of the simplest foundations is using small screw piles. They are easily screwed into the ground by hand so you don't need a machine.

1. Determine where each pile is to be located and ensure there are no buried hazards, like a gas line, where you will put each pile.
2. Use a board as a lever by placing it in the top of the pile, then walk around in a circle until the pile is in the ground.

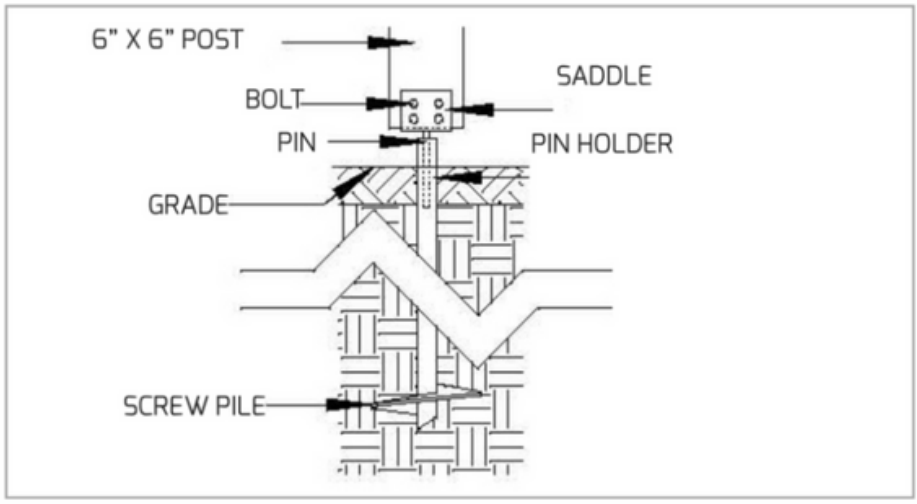

Ledger Board:

1. Determine the desired finish height of the deck. Then determine the thickness of the stone, the membrane, and the plywood; these typically add up to 1 ¾". This is a good height for the ledger board. It is not critical that the ledger board be specifically at this height as you can adjust the final height of the joists.

2. Attach the ledger board to the house using lag bolt, or other load rated fasteners.

How to build a Deck

Tanzite
STONEDECKS

Post and Beam:

1. Build a beam for the length you will need.
2. Determine the height you will need for each post. To account for slope you should drop ⅛” to ¼” per foot for proper drainage of the deck. Therefore if your posts are 12 feet from your house then the beam should drop 1 ½” - 3”.
3. Cut each post by measuring the height from the top of each pile to the bottom of the desired height of the beam.

Joists:

1. Determine the desired finish height of the deck. Then determine the thickness of the stone, the membrane, and the plywood; these typically add up to 1 ¾”
2. Install joist hangers onto the ledger board at the correct height.
3. Space the joists evenly, 18” on center or less.
    a. When placing each joist ensure that any crown, or arch, to the wood faces upward.
4. Double check that you have the appropriate slope away from the house. You should drop 1/8” to ¼” per foot for proper drainage of the deck.
5. Install spacers in between the joists in about the midway length of the joist.
6. Install a rim board at the open end of the joists.
7. Install extra bracing where railing posts will mount.

Tanzite
STONEDECKS

Plywood:

1. Lay out the tongue & groove plywood so that the seams are off set.
2. Use a chalk line to create a line on the plywood, on top of the joists.
3. Fasten the plywood to the joists.

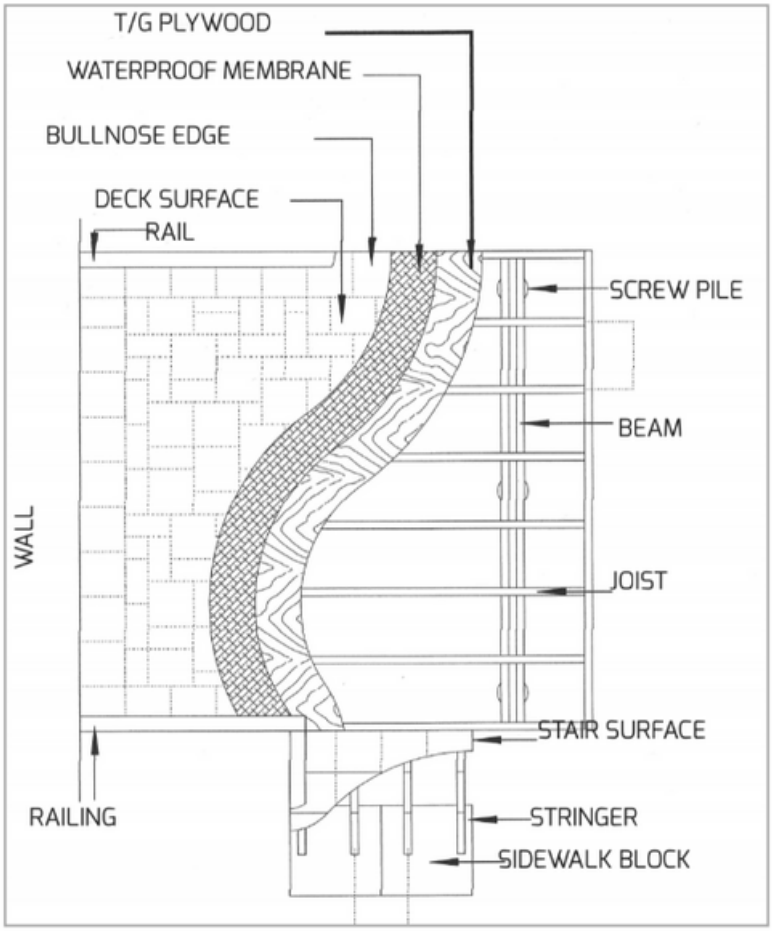

Tanzite
STONEDECKS

Steps:

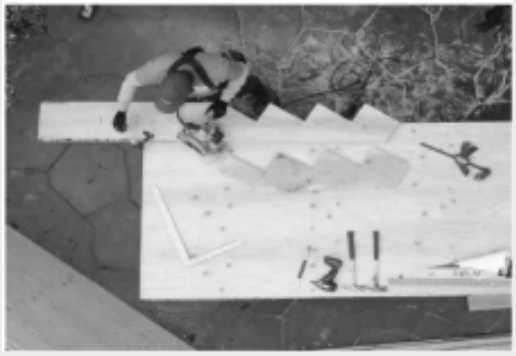

1. Determine the height from the top of the finished deck to the lowest point on the ground, where the stairs will meet the ground.
2. Take that height and divide by 7 ½”, then round up to determine he number of rises you will need (Example if the total height is 48” divided by 7.5” is 6.4 rounded up is 7 so you will need 7 rises).
3. Divide total height by the number of rises needed to determine the rise height (Example 48” divided by 7 is 6 7/8”). The run should always be 10 ½” to work perfectly for the stone.
4. Cut your stair stringers using the determined rise and 10 ½” run.
5. When cutting the stringer for the last step, remember to account for the thickness of the stone, the membrane, and the plywood. These typically adds to 1 ¾ (Example: if we use 1 ¾” then the rise for your last step should decrease by the same, 6 7/8” minus 1 ¾” equals 5 1/8” for the last rise).
6. Then install each stringer to the deck frame and cover with plywood.

Sides:

There are many different siding options that will work and look great with a stone deck. This details a common method using a 4’ x 8’ sheets made from materials like plastic lattice, wood or concrete fiber board.

1. Install a vertical stud to the back of the joist/rim board every 2’ on center all around the deck.
2. Attach horizontal boards to the stud such that they both run parallel and sit flush to the joist/rim board and are also spaced 2’ on center.
3. Install a bracer board that attaches to the bottom horizontal board and back to the deck at an angle.
4. Install the sheets to the horizontal boards ensuring the bottom is at the desired height and top sits above the deck.
5. Cut the top to be flush with the top of the plywood. This cut does not have to be very perfect as it will be covered.

Tanzite STONEDECKS

Water Protection:

First determine how to complete the water protection at the house, there are three standard methods. *There are a few other water protection methods that can also work well.

1.

- If you have access to the house wall (a house with siding that can be removed and reinstalled) Then run the EPDM 6+ inches up the wall and cover over with siding. SEE DETAIL 1A
- If there is Flashing installed on the house the seal the EPDM..to the existing flashing.
- If it is not practical to seal the EPDM to the house then instead run the EPDM down the wall between the nailer board and the; house leaving a slight gap at the house so that water does not collect. SEE DETAIL 1C

DETAIL 1A

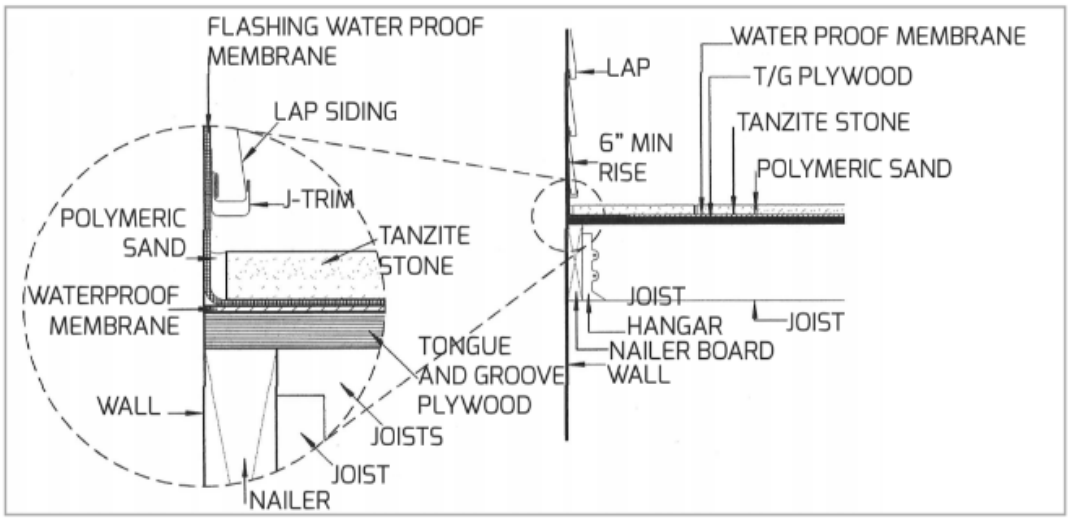

DETAIL 1C

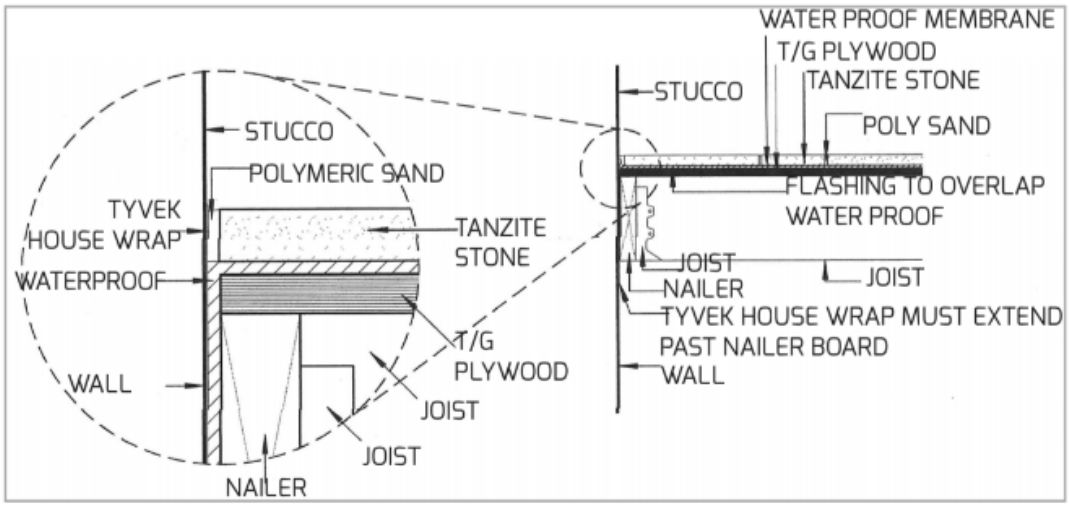

2. Place a full piece of EPDM roofing membrane on the plywood deck.surface and fit into place. Do not cut.
3. Run the edge of the membrane up the side of the house 6 or more .inches and attach to the house at the top of the membrane. Do not.attach at the corner.
4. Flatten to ensure there are no wrinkles.
5. If you will need to seam two pieces of EPDM then snap a chalk line at the edge of the first membrane. Use a planer to plane down the.plywood by the thickness of one membrane and the seam tape. This will allow the seam to sit flush in the groove created to ensure the stone does not have a bump in it. SEE DETAIL 5

6. Typically you can use waste material for the steps. Cut a piece of membrane for each step ensuring it is a foot longer and wider, than needed. SEE DETAIL 6
7. Lay each piece of membrane on the step so that there is extra on all sides. Then attach the membrane to the stair risers ensuring the higher step membrane overlaps the lower.
Do not cut excess membrane until after the stone is installed. SEE.DETAIL .8/9

DETAIL 5

DETAIL 6

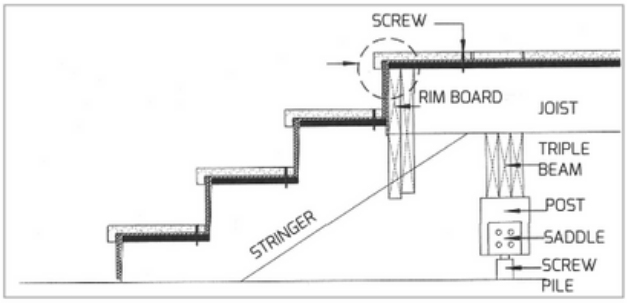

Tanzite
STONEDECKS

DETAIL 8

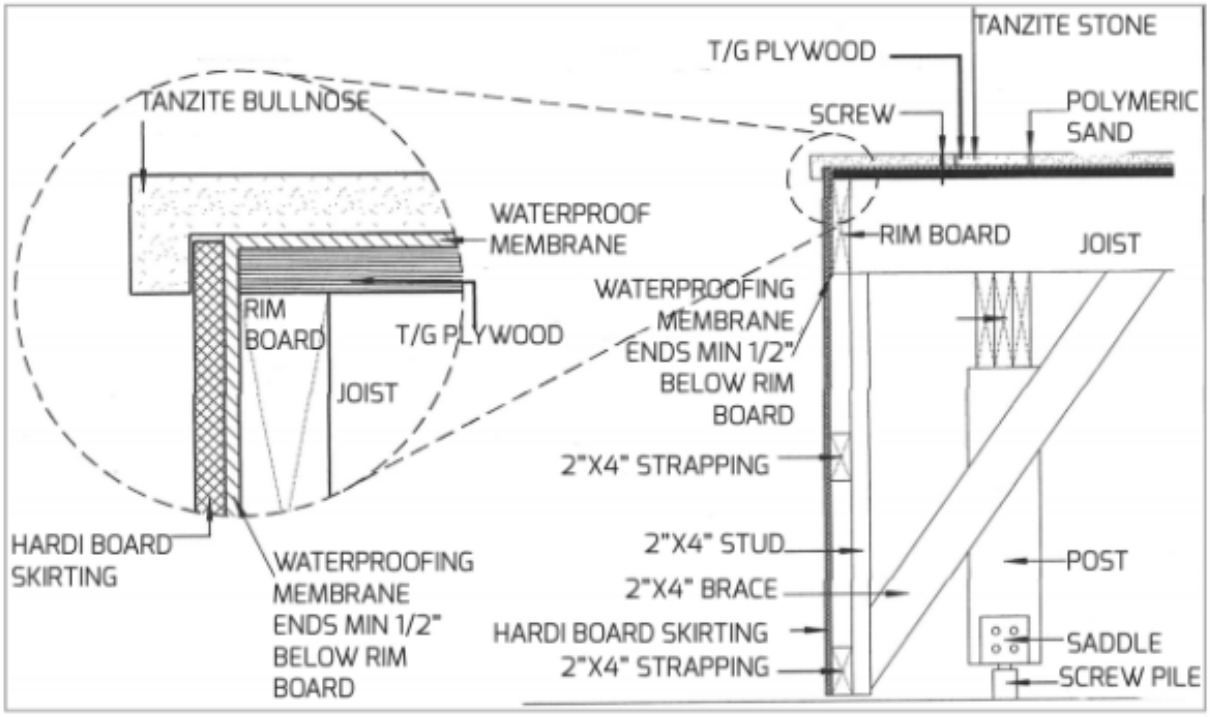

DETAIL 9

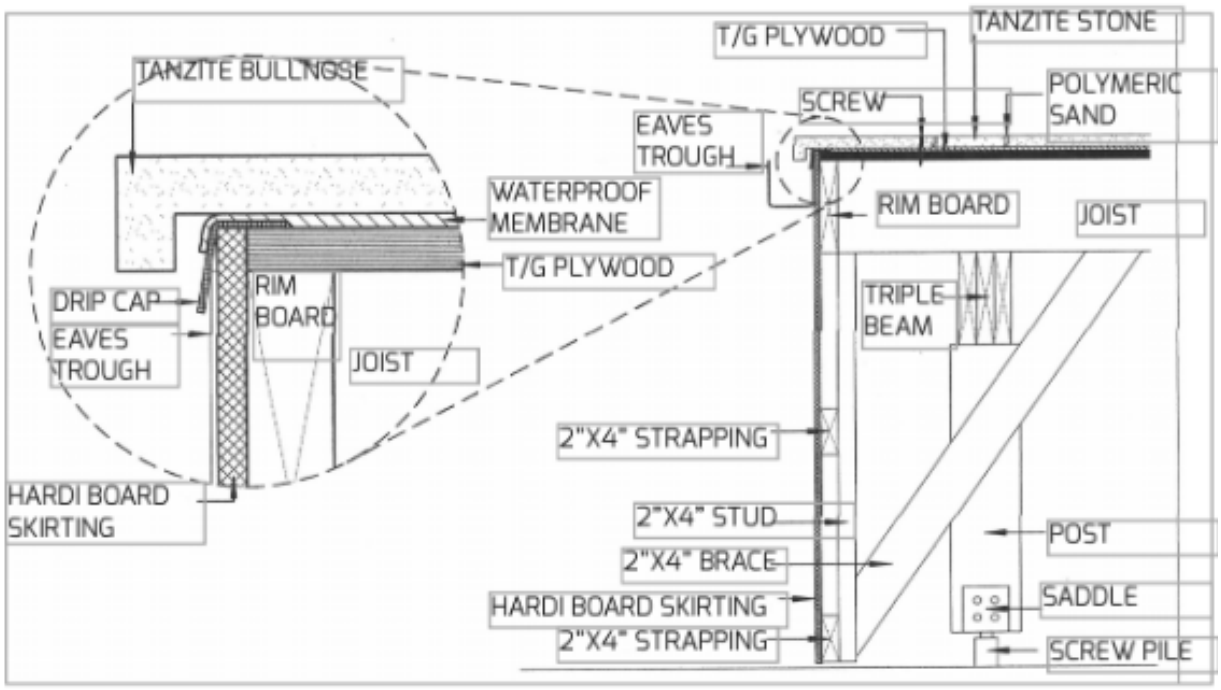

Tanzite
STONEDECKS

Tanzite Stones:

1. First lay the edge stones along the house to ensure the membrane is not tensioned. Then again ensure the membrane is flat with no wrinkles.
2. Install all of the edges and cornerstones. First, dry fit the bullnose stones. Do not push the stones tight against the side of the deck/deck frame. If the deck frame, or sides, expands or swells the stones may get damaged. Typically leave a minimum ¼" to allow for swelling. Once the stones have been dry fit, place a small amount of sealant, silicone, or caulking into each of the pre-drilled holes in the stone. Then screw each bullnose stone to the wood structure. Only use stainless screws as the Tanzite is so hard that it will strip the coating off a metal screw leading it to rust.
3. Install all the Tanzite stones on the steps, same as step 2.
4. Install all the inlay Tanzite stones, laid in the desired pattern. (Tip:, use a dolly with a ramp to cart the stone onto the deck)
5. Cutting the Tanzite stone can be done with a tile saw, or a saw with a diamond blade. The Tanzite bullnose stones should only be cut with a saw that has a diamond blade. (Tip:, often you can adjust the size of the deck slightly to match the size of the Tanzite stone to avoid the need to cut, see the chart on page 3 for recommended sizes.)
6. Then check over all the stones to ensure they are sitting flat and straight.

Tanzite
STONEDECKS

Railing:

1. Determine the location of each railing post and the mark the hole locations on the stone.
2. Pre-drill each hole using a diamond hole saw. Do not use a masonry bit. (Tip: using a ring around the hole can then hold water to keep the drill bit cool, extending the bit's life)
3. Fill each pre-drilled hole with sealant prior to drilling the post screw into the wooden structure.
4. Then complete the railing as per manufacturer's specifications.

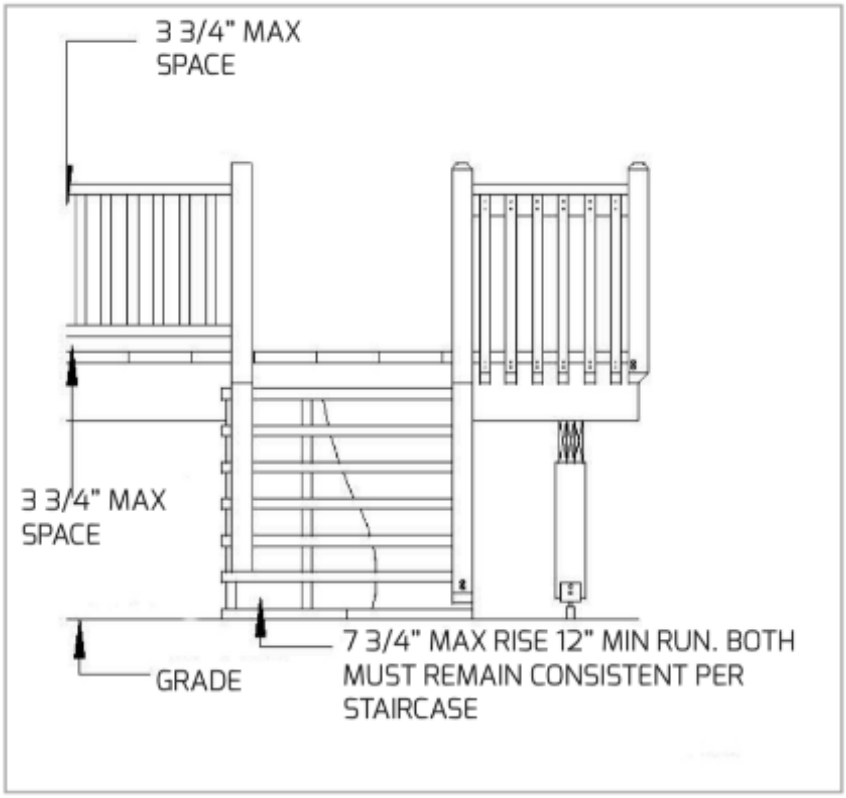

Tanzite
STONEDECKS

Polymeric Sand:

1. Check the weather forecast to ensure temperature will not dip below freezing overnight and that it will not rain for 48-72 hours.
2. Sweep the polymeric sand into all the gaps in the stone. It is not important to fill any gap between the screwed down edge stones, this is why they don't have spacers.
3. Tap the stones with the broom to ensure the gaps are filled. Then sweep/blow off any access. (Tip: use a blower to lightly blow the dust off the stones for a better finish.)
4. Wet the polymeric sand. The trick here is to wet it as much as possible.without any water running across the surface. (Tip: a spray bottle.provides better control but a garden hose is quicker)

- this is why it is important to not have rain in the forecast, you will apply the proper amount of water but rain may overdue it.

Self-Levelling Caulking:

Self-levelling caulking can be used in place of polymeric sand to create increased water protection between the stones.

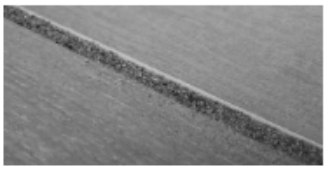

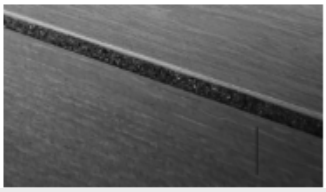

1. Cut the application cone so that the tip can fit at least halfway down the stone towards the membrane. If it is too small, it will take more time and effort. If it is too large, it won't fit between the stones making it harder to get a clean finish.
2. Apply the caulking until the gap is approximately filled 2/3rds of the way to top of the stones. The caulking self-levels in just a few seconds.
3. While the caulking is still wet, apply a layer of polymeric sand to the top of the caulking. This gives it a much nicer finished texture and look.
4. Remove any additional polymeric sand then use a blower to lightly blow off any glue dust.
5. Mist the polymeric sand with water to activate it.
6. Repeat steps 2-5 until all joints are filled.

Tanzite
STONEDECKS

HOW TO COVER AN EXISTING DECK

Determine suitability

1. Check that you will have enough room between the top of the deck and the door threshold for the stone to fit.
2. Ensure the deck is structurally sound.
3. Determine if the deck has a slight slope, or if a slope can be added.

Adjust slope

If the deck does not have a slight slope it is normally easy to add one. You should drop 1/8” to 1/4” per foot for proper drainage of the deck. There are many ways to adjust the slope that will work, detailed here is a method that will commonly work

1. Use a temporary post and place it next to a current deck post set on a jack.
2. Lift the deck until the existing post can be removed.
3. Cut the post shorter to achieve the desired slope and replace.
4. Then lower the deck down onto the cut post and repeat for each post of the deck.

Tanzite STONEDECKS

Water Protection:

First determine how to complete the water protection at the house, there are three standard methods. There are many other water protection methods that can also work well.

1. Determine how you will install the membrane along the house.
   a. If you have access to the house wall (a house with siding that can be removed and reinstalled) Then run EPDM 6+ inches up the wall and cover over with siding.
   b. If there is Flashing installed on the house then seal the EPDM to the existing flashing.
   c. If it is not practical to seal it to the house then instead run the EPDM and plywood leaving a slight gap before the house so that water can drain over the joists.
2. Place a full piece of EPDM roofing membrane on the wooden structure and fit into place. Do not cut.
3. Run the edge of the membrane up the side of the house 6 or more inches and attach to the house at the top of the membrane. Do not attach at the corner.
4. Flatten to ensure there are no wrinkles.
5. If you will need to seam two pieces of EPDM then snap a chalk line at the edge of the first membrane. Use a planer to plane down the plywood by the thickness of one membrane and the seam tape. This will allow the seam to sit flush in the groove created to ensure the stone does not have a bump in it.
6. Typically you can use waste material for the steps. Cut a piece of membrane for each step ensuring it is a foot longer, and wider than needed.
7. Lay each piece of membrane on the step so that there is extra on all sides. Then attach the membrane to the stair risers ensuring the higher step membrane overlaps the lower.
8. Do not cut excess membrane until after the stone is installed

Tanzite Stones:

1. First lay the edge stones along the house to ensure the membrane is not tensioned. Then again ensure the membrane is flat with no wrinkles.
2. Install all of the edges and cornerstones. First, dry fit the bullnose stones. Do not push the stones tight against the side of the deck/deck frame. If the deck frame, or sides, expands or swells the stones may get damaged. Typically leave a minimum ¼" to allow for swelling. Once the stones have been dry fit, place a small amount of sealant, silicone, or caulking into each of the pre-drilled holes in the stone. Then screw each bullnose stone to the wood structure. Only use stainless screws as the Tanzite is so hard that it will strip the coating off a metal screw leading it to rust.
3. Install all the Tanzite stones on the steps, same as step 2.
4. Install all the inlay Tanzite stones, laid in the desired pattern. (Tip:, use a dolly with a ramp to cart the stone onto the deck)
5. Cutting the Tanzite stone can be done with a tile saw, or a saw with a diamond blade. The Tanzite bullnose stones should only be cut with a saw that has a diamond blade. (Tip:, often you can adjust the size of the deck slightly to match the size of the Tanzite stone to avoid the need to cut, see the chart on page 3 for recommended sizes.)
6. Then check over all the stones to ensure they are sitting flat and straight.

Tanzite STONEDECKS

Railing:

1. Determine the location of each railing post and the mark the hole locations on the stone.
2. Pre-drill each hole using a diamond hole saw. Do not use a masonry bit. (Tip: using a ring around the hole can then hold water to keep the drill bit cool, extending the bit's life)
3. Fill each pre-drilled hole with sealant prior to drilling the post screw into the wooden structure.
4. Then complete the railing as per manufacturer's specifications.

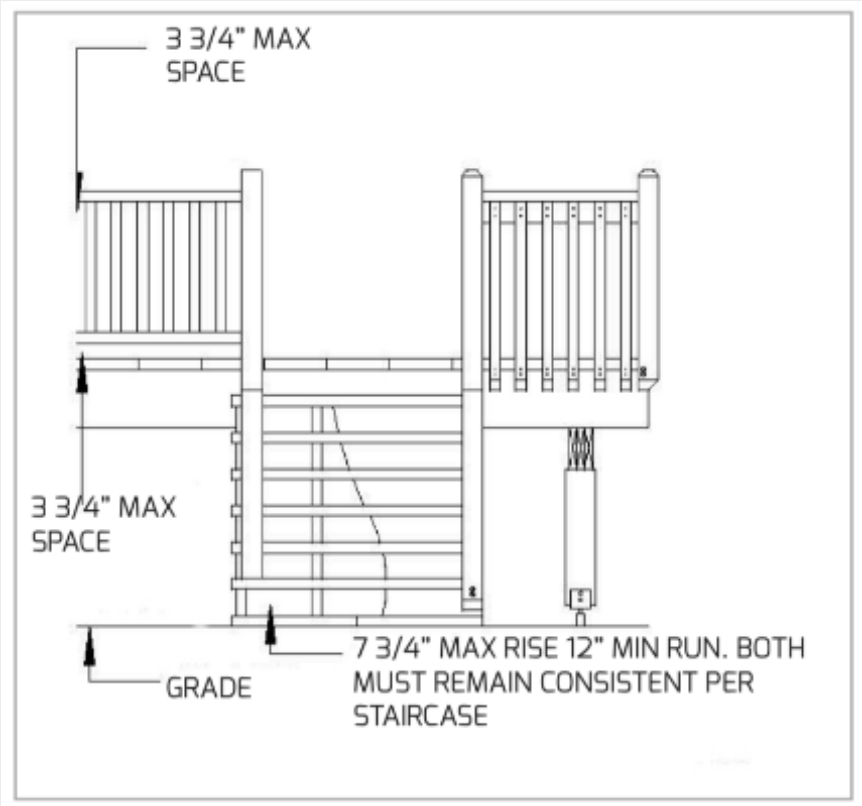

Polymeric Sand:

1. Check the weather forecast to ensure temperature will not dip below freezing overnight and that it will not rain for 48-72 hours.
2. Sweep the polymeric sand into all the gaps in the stone. It is not important to fill any gap between the screwed down edge stones, this is why they don't have spacers.
3. Tap the stones with the broom to ensure the gaps are filled. Then sweep/blow off any access. (Tip: use a blower to lightly blow the dust off the stones for a better finish.)
4. Wet the polymeric sand. The trick here is to wet it as much as possible.without any water running across the surface. (Tip: a spray bottle.provides better control but a garden hose is quicker)

- this is why it is important to not have rain in the forecast, you will apply the proper amount of water but rain may overdue it.

Self-Levelling Caulking:

Self-levelling caulking can be used in place of polymeric sand to create increased water protection between the stones.

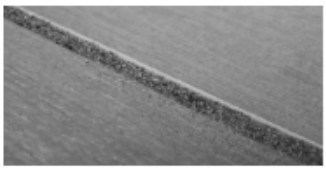

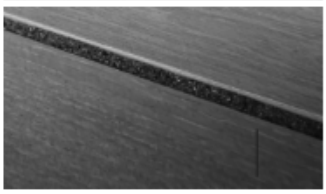

1. Cut the application cone so that the tip can fit at least halfway down the stone towards the membrane. If it is too small, it will take more time and effort. If it is too large, it won't fit between the stones making it harder to get a clean finish.
2. Apply the caulking until the gap is approximately filled 2/3rds of the way to top of the stones. The caulking self-levels in just a few seconds.
3. While the caulking is still wet, apply a layer of polymeric sand to the top of the caulking. This gives it a much nicer finished texture and look.
4. Remove any additional polymeric sand then use a blower to lightly blow off any glue dust.
5. Mist the polymeric sand with water to activate it.
6. Repeat steps 2-5 until all joints are filled.

Tanzite
STONEDECKS

HOW TO INSTALL ON THE GROUND

Excavation:

1. Excavate the area down to the native earth, to a minimum of 6” depth.
2. Adjust the soil to be at the desired slope. You should drop 1/8” to 1/2” per foot for proper drainage of the deck (Tip: install a stringline to the desired finished height of the deck to use as reference

Base:

1. Compact the existing native earth.
2. Add a base material (Example: ¾” crushed gravel)
3. Compact the base material after adding 2” of base material, adding the full amount then compacting will only compact the top material and the lower material will settle over time.
4. Repeat steps 2 & 3 until the base material is 1 ½” - 2” below the finished elevation of the stones surface.

Preparation:

1. Cover the base material with fine rock material. (Example: sand or crushed limestone)
2. Smooth the fine rock material to be ¾” below the desired finished height.
3. Check the slope again to ensure proper drainage.

Edging:

1. Install a low profile Snap Edging (or similar) plastic edge border around the perimeter. The top edge of the plastic should only extend above the prepared base ¾”.
2. Then use 10” galvanized spikes to secure the plastic border.

How to build a Deck

Tanzite
STONEDECKS

Tanzite Stone:

1. Install all the Tanzite stone, laid in the desired pattern.
2. Cutting the Tanzite stone can be done with a tile saw, or a saw with a diamond blade. (Tip: often you can adjust the size of the deck slightly to match the size of the Tanzite stone to avoid the need to cut see page 3 for recommended sizing).
3. Then check over all the stones to ensure they are sitting flat.

Polymeric Sand:

1. Check the weather forecast to ensure temperature will not dip below freezing overnight and that it will not rain for 48-72 hours.
2. Sweep the polymeric sand into all the gaps of the stone.
3. Tap the stones with the broom to ensure the gaps are filled. Then sweep/blow off any access. (Tip: use a blower to lightly blow the dust off the stones for a better finish.)
4. Wet the polymeric sand. The trick here is to wet it as much as possible without any water running across the surface. (Tip: a spray bottle provides better control but a garden hose is quicker)

* this is why it is important to not have rain in the forecast, you will apply the proper amount of water but rain may overdue it.

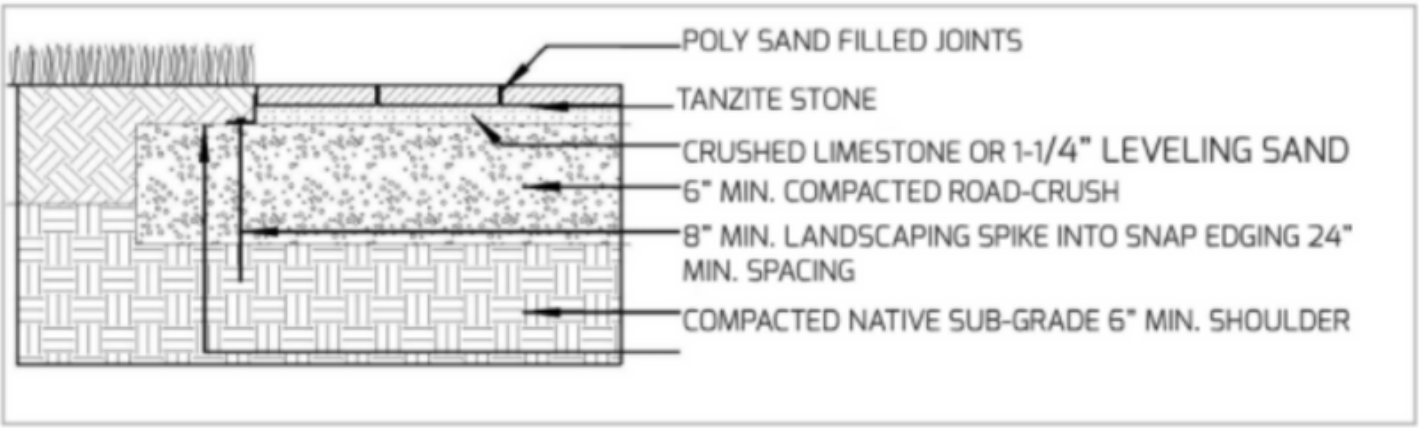

HOW TO COVER EXISTING CONCRETE

Determine suitability:

Check that there will be enough room between the top of the concrete and the door threshold for the stone. Also ensure that the concrete is structurally sound and properly sloped.

Tanzite Stone Edge:

If the concrete is elevated then you need to use the Tanzite edge and corner stones.

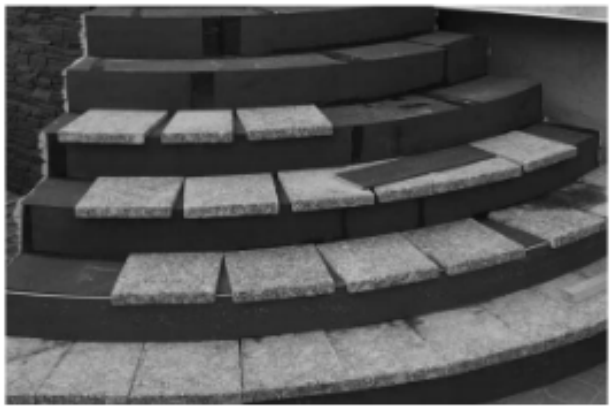

1. Install all the Tanzite edge and corner stones. First mark the location of pre-drilled holes in the Tanzite stone onto the concrete surface.
2. Pre-drill the concrete at each hole location and insert a plastic screw anchor.
3. Then screw each edge stone into the concrete. Only use stainless screws as the Tanzite stone is so hard that it will strip the coating off a metal screw, leading it to rust.
4. Install all the Tanzite stones on the steps, same as above. Installing on ground level concrete.

If the concrete is at ground level then you DO NOT need to use the Tanzite edge and corner stones.

1. First install a Snap Edging (or similar) plastic edge border around the perimeter of the concrete. The top edge of the plastic should only extend above the concrete ¾”.
2. Then use 10” galvanized spikes to secure the plastic border.

Tanzite
STONEDECKS

Tanzite Stone:

1. Use polymeric sand, or concrete filler, to fill any defects in the concrete to smoothen the surface as needed.
2. Install all the Tanzite stone, laid in the desired pattern. (Tip: use a dolly with a ramp to cart the stone onto the deck)
3. Cutting the Tanzite stone can be done with a tile breaker, a tile saw, or a saw with a diamond blade. The Tanzite edge stones should only be cut with a Tile saw, or a saw with a diamond blade. (Tip: often you can adjust the size of the deck slightly to match the size of the Tanzite stone to avoid the need to cut, see page 3 for recommended sizes)
4. Check over all the stone to ensure they are sitting flat and straight. You can adjust them as needed using Polymeric sand as a shim.
5. Wet the polymeric sand and let sit for 24 hours before proceeding.

Polymeric Sand:

1. Check the weather forecast to ensure temperature will not dip below freezing overnight and that it will not rain for 48-72 hours.
2. Sweep the polymeric sand into all the gaps of the stone.
3. Tap the stones with the broom to ensure the gaps are filled. Then sweep/blow off any access. (Tip: use a blower to lightly blow the dust off the stones for a better finish.)
4. Wet the polymeric sand. The trick here is to wet it as much as possible without any water running across the surface. (Tip: a spray bottle provides better control but a garden hose is quicker)
   * this is why it is important to not have rain in the forecast, you will apply the proper amount of water but rain may overdue it.

Tanzite STONEDECKS

Self-Levelling Caulking:

Self-levelling caulking can be used in place of polymeric sand to create increased water protection between the stones.

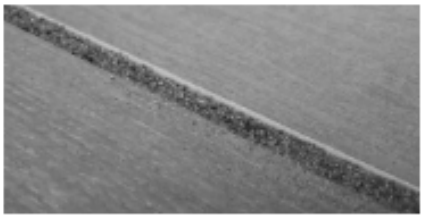

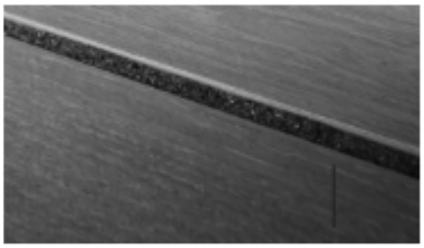

1. Cut the application cone so that the tip can fit at least halfway down the stone towards the membrane. If it is too small, it will take more time and effort. If it is too large, it won't fit between the stones making it harder to get a clean finish.
2. Apply the caulking until the gap is approximately filled 2/3rds of the way to top of the stones. The caulking self-levels in just a few seconds.
3. While the caulking is still wet, apply a layer of polymeric sand to the top of the caulking. This gives it a much nicer finished texture and look.
4. Remove any additional polymeric sand then use a blower to lightly blow off any glue dust.
5. Mist the polymeric sand with water to activate it.
6. Repeat steps 2-5 until all joints are filled.

Maintenance

Tanzite
STONEDECKS

- Cleaning can be done with soap and water, you can even use a pressure washer! Just try not to spray directly into the joints as the polymeric sand can be removed with the pressure washer. Keep this in mind if you ever want to re-new your polymeric sand though!
- Cleaning tough grease or oil that won't come off with just water may require a heavy duty degreaser. You can even use a heavy duty engine degreaser without worrying about the stone.
- The polymeric sand may need to be topped up, or segments can come out. This can easily be repaired by sweeping in some extra polymeric sand when it is dry. Once filled, just soak using a spray bottle and let sit for 24 hours.
- We recommend checking the structure, railing, and deck edge stone yearly to ensure they are all fastened and secure.

Tanzite STONEDECKS

EXCLUSIONS FROM WARRANTY COVERAGE AND LIMITING OF LIABILITY:

Product Installation:

The Product must be installed in accordance with industry standards and the Manufacturer's written specifications for installations including but not limited to industry standards, such as, but not limited to waterproofing, crack isolation, substrate requirements, movement, and expansion joints. This also includes requirements such as checking before installation that the Product has no defects, the Product is fit for purpose, checking for sufficient quantities of the Product of the same batch are supplied, the proper blending of the variation of colors of the Product supplied, and compliance with the Manufacturer's written specifications and industry standards for installation, maintenance, and repair. If a defect is identified in the Product before installation, the Product shall not be installed, as installation of the Product with a defect identifiable before installation or visual defects or nonconformities apparent prior to installation voids this warranty. Once the Product has been installed, the Manufacturer is not liable for color matching or blending or for the replacement of tiles with obvious visual faults. Water, ice, oil, grease, and other substances create slippery conditions, and the Manufacturer is not responsible for and makes no express or implied warranty respecting the suitability or fitness for any purposes including but not limited to floor applications in or with slippery conditions. Damage during or after installation and installation defects are not covered by this warranty, and this warranty does not apply when deterioration results from the Product not being suitable for the intended use, a design or installation not complying with applicable codes, standards and recognized work procedures, or if the installation the Manufacturer's written specifications have not been followed. Damage or cracking due to structural movement, collapse or settling of the ground or supporting structure, excessive deflection or other failure in the substrate, normal wear and tear, damage or defects caused by incorrect installation, lack of proper maintenance, accidents, abuse or misuse are excluded from coverage under this warranty. Defective installation such as, but not limited to, any substrate repair material or any accessory products such as third part fasteners; weak concrete and masonry substrates, substrate or sub-floor irregularities; substrate or subfloor deterioration; natural color variations; freight, material and labor costs.

Lippage:

Lippage refers to differences in elevation between edges of adjacent tile modules. The perception of height variances is influenced by a number of factors, including allowable warpage of the tile modules, warpage of the deck structure, the angle of light creating shadows and highly reflective surfaces accentuating otherwise acceptable variance in modules. After installation when lippage is present it should be corrected by the installer. To eliminate or address lippage, the proper preparation of the base and installation of the Product is required by skilled professionals. Lippage is an installation defect and not covered by this warranty.

Tanzite STONEDECKS

EXCLUSIONS FROM WARRANTY COVERAGE AND LIMITING OF LIABILITY:

Variations:

Variation in veining, fissures, pits, texture, color and shade are inherent characteristics of all tiles of this nature, and will vary from tile to tile as well as from lot to lot. The Manufacturer does not warrant the Product for shade, size, thickness, warping, cleft variations, surface finish variations, or other natural variances on the Product. An inherent characteristic of all tiles manufactured as the within Products are, is that they will bow, wedge and warp to a certain degree and may slightly vary in size from batch to batch. These variations in size and color are due to changes in moisture and thermal loads which can alter the tiles during production. Batches of tile are identified and separated into lots by specific shade and caliber. Product samples are representative only and may not be an exact match to supplied materials due to variations in manufacturing and the natural raw materials making the Product. Photographic color images may not be an exact product match to the supplied Product as the supplied Product may have slight differences in color, shade, and/or surface appearance. The Manufacturer's website, marketing literature and promotional materials may not represent the true nature of the Product.

Maintenance and Cleaning:

The Product must be properly maintained and cleaned in accordance with the Manufacturer's Tanzite Owner's Manual, and Manufacturer's written specifications and industry standards. Failure to regularly and properly clean and maintain the Product will void this warranty. The Product contains abrasives creating a rough surface, and cleaning challenges because dirt and other contaminants lodge in the surface. Extra attention is necessary to assure contaminants are removed promptly. For clarity the Product should not be in contact with any toxic substances, acids, bases, or other substances that will damage its surfaces.

Normal Wear and Tear:

This warranty does not cover normal wear and tear and any other problems that are caused by conditions, malfunctions, or damage not resulting from defects at the time of purchase, in the manufacturing of the Products, in accordance with ANSI A137-1-2017 standards.

Impacts and Abrasions:

The warranty does not apply to normal wear and tear, spalling or other breakage or damage that may be caused by impact, abrasion or inappropriate or inadequate live loads. Never allow hard, sharp-edged, or heavy, objects to fall or otherwise causing an inappropriate load on the Product as any resulting such damage, chipping, or cracking, to the surface of the Product is not covered by this warranty.

Tanzite STONEDECKS

EXCLUSIONS FROM WARRANTY COVERAGE AND LIMITING OF LIABILITY:

Misuse of the Product:

The misuse including but not limited to accidents, negligence, physical or chemical abuse or other damage to the Products that may result from deliberate act or negligence on the part of the customer, buyer, owner of the property where the Product is installed, installer or any third party is not covered by this warranty. The improper handling, storage, abuse or neglect of Product on the part of the customer, buyer, owner of the property where the Product is installed, installer or any third party is not covered by this warranty.

Acts of God, Ordinary Wear and Tear, Intentional or Negligent Acts:

This warranty does not apply to any damage resulting from or related to an act of God [including but not limited to flooding, tornado, strong winds, storms, fire, lightning, earthquake etc.]; environmental conditions and atmospheric conditions [air borne pollutants and contaminants]; staining from foreign substances [acids, bases]; normal weathering including but not limited to exposure to sunlight, wind, rain, weather, environmental conditions and atmospheric conditions; fire; vandalism; ordinary wear and tear; improper handling, storage, abuse or neglect of the Product or other damage to the Products that may result from deliberate act or negligence on the part of the customer, buyer, owner of the property where the Product is installed, installer or any third party.

Applicable Building Codes:

Applicable building codes and laws may dictate minimum the Product performance specifications, and the Manufacturer does not warrant the Product where the use, or installation, of the Product violates applicable building codes and laws.

Limiting of Liability:

At the time of manufacturing, the Product achieves the necessary values for the ANSI A137.1-2017 standards. Tests are performed on random samples of the Product by an independent testing laboratory and are believed to be representative of the general quality of the Product. To the fullest extent permitted under the law, under no circumstances will the Manufacturer be liable for incidental or consequential damages, whether such damages are sought in contract, in tort (including but not limited to negligence and strict liability) or otherwise, and the Product liability for non-personal injury claims with respect to products shall in no event exceed the replacement of such defective products or refund as set forth herein. Some States or Provinces do not allow the exclusion or limitation of incidental or consequential damages, so the above limitation or exclusion may not apply to you. This warranty gives you specific legal rights, and you may also have other rights that vary from State to State or Province to Province.

Tanzite
STONEDECKS

MAKING A WARRANTY CLAIM AND LIMITS ON LIABILITY:

To make a claim under this limited warranty, you must notify the Manufacturer in writing within fifteen (15) days of the discovery of the alleged manufacturing defect to the following address:

Email to:
warranty@tanzite.com

As a condition of this warranty, the following must be provided to the Manufacturer with written notice of a claim, failing which this warranty is voided and the Manufacturer released from any and all liability for the defect or the claim:

1. Provide satisfactory evidence of defects in the tiles purchased, including but not limited to, a description and photographs of the affected area of the Product,
2. Proof of purchase or assignment from the original end-user purchaser;
3. Proof of identity showing current address,

As a condition of this warranty proof of use, installation and maintenance and care pursuant to the Manufacturer's Tanzite Owner's Manual, and Manufacturer's written specifications and industry standards must be provided to the Manufacturer upon its request, failing which this warranty is voided and the Manufacturer released from any and all liability for the defect or the claim. If a claim relating to the a manufacturing defect and the improper staining of the Product, in addition to the foregoing, the following must be complied with prior to providing a written notice of a claim to the Manufacturer, failing which this warranty is voided and the Manufacturer released from any and all liability for the defect or the claim:
i. the affected area of the Product must be cleaned in accordance with the Manufacturer's written specifications.
ii If the affected area remains reasonably unsatisfactory after the affected area of the Product has been cleaned as set forth above, then the affected area of the Product must be professionally cleaned at the sole expense of the party making the claim or contemplating a claim.
iii. If the affected area remains reasonably unsatisfactory after the professional cleaning, a claim may be made under this warranty, within fifteen (15) days of the professional cleaning
.
If a valid warranty is made, recovery the Manufacturer at its complete discretion by any of the following:

1. Replacement of a portion of defective Product with same or equivalent product [with the cost for freight, labor, materials and costs for installation, maintenance or replacement not being covered by this warranty] as calculated below
2. Repair or re-polish of the defective Product;
3. Refund a prorated portion of the original purchase price paid by for such defective Product [but not including the cost for freight, labor, materials and costs for installation, maintenance or replacement of the Product] as calculated below
4. Combination of the above provided that the Manufacturer's obligations are limited only to Product or parts of the Product that are proven to be defective pursuant to the terms of this warranty and the Manufacturer.

If a valid warranty claim hereunder is made, the percentage of such valid claim which the Manufacturer is required in its complete discretion to refund or replace pursuant to this warranty shall commence the eleventh (11) year after the original date of purchase of the Product be reduced by five (5%) percent each year thereafter, reducing 5% each and every year thereafter until ten [10%] percent of the such valid claim remains, at which time there shall be no further reduction to the percentage of the valid claims which the Manufacturer is required in its complete discretion to refund or replace pursuant to this warranty. For clarity in no event shall the Manufacturer be required to refund any more than the prorated portion of the original purchase price or replace more than the prorated portion of the defective Product as calculated herein. In the event that the sole and exclusive remedy described above fails of its essential purpose, the liability of the Manufacturer is limited to the monetary value, on a square-foot (square-meter) basis, of the original purchase price of the Product or portion of the Product required to be replaced pursuant to the terms of this warranty.
To the fullest extent permitted under the law, this warranty shall not cover and the Manufacturer shall not be responsible for costs and expenses, including but not limited to labor, costs, and freight, incurred with respect to the installation, maintenance, or removal of the Product or affected Product or the installation of replacement materials.
The Manufacturer will not pay for the replacement of any portion of the installation that is not proven to be defective.
To the fullest extent permitted under the law, the costs and expenses incurred with respect to the removal and installation of the defective Product or the installation of replacement materials, including but not limited to freight, labor, and materials costs are excluded from this warranty. Should the Product used in the original installation no longer be readily available, the Manufacturer reserves the right to determine a suitable substitute at its option but will only provide a replacement product for the defective Product and not the entire installation.
The Manufacturer reserves the right to inspect any and all defects prior to any repair, remediation or settlement of such defect. In the event that the Manufacturer within its sole discretion elects to or is otherwise required to participate in the repair, remediation or settlement of any defect, the Manufacturer must be included in all discussions and decisions related to such repair, remediation and/or settlement. In the event that the Manufacturer is not provided notice on a timely basis, or the Manufacturer is not allowed the right of inspection, discussion or decision making in advance of repair, re mediation or settlement of any defect, this warranty is voided and the Manufacturer released from any and all liability for the defect or the claim.

General Terms:

No amendment or variation of the terms, conditions warranties, covenants, agreements and undertakings set forth herein shall be of any force or effect unless the Manufacturer same shall be reduced to writing duly executed by the Manufacturer and the party purchasing the Product from the Manufacturer. Any provision in this warranty which is prohibited or unenforceable in any jurisdiction shall, as to such jurisdiction, be ineffective to the extent of such prohibition or unenforceability without invalidating the remaining provisions hereof or affecting the validity or enforceability of such provision in any other jurisdiction. The division of this warranty into Articles, Sections, Subsections, Schedules and other subdivisions, the inclusion of headings and the provision of a table of contents are for convenience of reference only and shall not affect the construction or interpretation of this warranty. The headings in the warranty are not intended to be full or precise descriptions of the text to which they refer.

Product Specifications

Tanzite
STONEDECKS

	Color	Size (mm)	Weight (lbs)	Product code
	Black Granite	Small Stone (146+6)x(298+6) x20	4.5	BG15
	Black Granite	Medium Stone (298+6)x (298+6)x20	9.11	BG30
	Black Granite	Large Stone (298+6)x(450+6) x20	13.82	BG45
	Black Granite	Fascia Bullnose Stone 298x170x(20+10)	9.48	BGFLS
	Black Granite	Bullnose Stone 298x298x (20+20)	9.85	BGLS
	Black Granite	Corner Bullnose Stone 298x298x(20+20)	10.52	BGCS
	Cinnamon Brown	Small Stone (146+6)x(298+6) x20	4.5	CB15
	Cinnamon Brown	Medium Stone (298+6)x (298+6)x20	9.11	CB30
	Cinnamon Brown	Large Stone (298+6)x(450+6) x20	13.82	CB45
	Cinnamon Brown	Bullnose Stone 298x298x (20+20)	9.85	CBLS
	Cinnamon Brown	Corner Bullnose Stone 298x298x(20+20)	10.52	CBCS
	Sierra Gray	Small Stone (146+6)x(298+6) x20	4.5	SG15
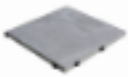	Sierra Gray	Medium Stone (298+6)x (298+6)x20	9.11	SG30
	Sierra Gray	Large Stone (298+6)x(450+6) x20	13.82	SG45
	Sierra Gray	Bullnose Stone 298x298x (20+20)	9.85	SGLS

Product Specifications

Tanzite
STONEDECKS

	Sierra Gray	Corner Bullnose Stone 298x298x(20+20)	10.52	SGCS
	White Oak	Plank Stone (198+6)x (1200+6)x20mm	24.03	WO12
	White Oak	Bullnose Stone 1200x304x (20+20)	39.57	WOLS
	White Oak	Corner Bullnose Stone 304x304x(20+20)	10.78	WOCS
	Walnut	Plank Stone (198+6)x (1200+6)x20mm	24.03	WN12
	Walnut	Bullnose Stone 598x304x (20+20)	19.8	WNLS
	Walnut	Corner Bullnose Stone 298x298x(20+20)	10.52	WNCS
	Aged Cedar	Plank Stone (198+6)x (1200+6)x20mm	24.03	AC12
	Aged Cedar	Bullnose Stone 598x298x (20+20)	19.8	ACLS
	Aged Cedar	Corner Bullnose Stone 298x298x(20+20)	10.52	ACCS

Tanzite Accessories

	Color	Size (mm)	Weight (lbs)	Product code
	Black	Stainless Steel Screws	0.01063	SBLB
	Brown	Stainless Steel Screws	0.01063	SBRB
	Gray	Stainless Steel Screws	0.01063	SGRB
	Uncoloured	Stainless Steel Screws	0.01063	SUCB
10'	Black	10' wide membrane, per ft	3.09	EPDM10
15'	Black	15' wide membrane, per ft	4.63	EPDM15

Product Specifications

Tanzite
STONEDECKS

	Black	20' wide membrane, per ft	6.17	EPDM20
	Black	30' wide membrane, per ft	9.26	EPDM30
	Charcoal	Polysand	55.12	PSCH
	Brown	Polysand	55.12	PSBR

Rainier Technical Data

Tanzite
STONEDECKS

Rainier Testing Data, and Load Specifications

Properties

Property	Requirement	Results
Weight		4.76 lbs / linear foot
Density		144 lb / cubic foot
Temperature/Moisture Effect	ICC-ES AC174	Meets Code
Creep Relaxation	ICC-ES AC174	Meets Code
UV Resistance	ICC-ES AC174	Meets Code
Resistance to surface abrasion	UNE-EN-ISO 10545-7	PEI III
Compressive Modulus		4061 PSI
Moisture expansion	UNE-EN-ISO 10545-10	< 0.1 mm/m
Chemical resistance	UNE-EN-ISO 10545-13	HA/LA
COF of Linear Thermal Expansion	ASTM D696	5,3 x 10 -6 oC-1
Resistance to stains	UNE-EN-ISO 10545-14	Class 5
Dynamic coefficient of friction	ANSI A137.1	0.7 (R11)
Water Absorption	ANSI A137.1	< 1%
Reaction to fire	UNE-EN 13501-1	A1 No reaction

Rainier Technical Data

Tanzite
STONEDECKS

Tolerances

Property	Requirement	Results
Width	UNE-EN-ISO 10545-2	± 0.04" (1 mm)
Length	UNE-EN-ISO 10545-2	± 0.04" (1 mm)
Thickness	UNE-EN-ISO 10545-2	± 0.04" (1 mm)
Straightness of sides	UNE-EN-ISO 10545-2	± 0.06" (1.5 mm)
Rectangularity	UNE-EN-ISO 10545-2	± 0.06" (1.5 mm)
Lateral curvature	UNE-EN-ISO 10545-2	± 0.06" (1.5 mm)
Warpage	UNE-EN-ISO 10545-2	± 0.08" (2 mm)

Live Load Limits

Maximum Capacity is determined by the sub-floor structure
The Tanzite can handle 500 lbf / sq. ft.when placed on equvialent sup-floor

Use on stairs

Maximum Capacity is determined by the sub-floor structure
The Tanzite can handle a concentrated load of 300 lbf when placed on equvialent sup-floor

Deck Framing Guide

Tanzite
STONEDECKS

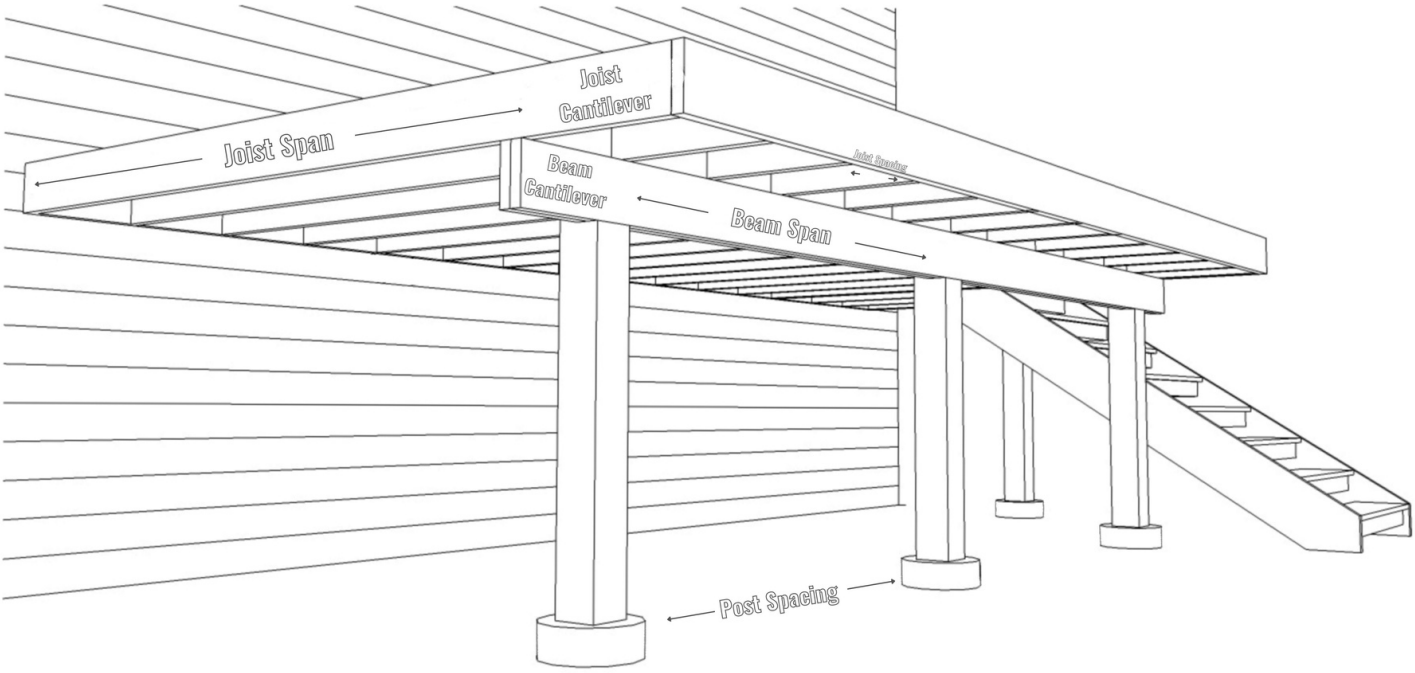

Appalachian Deck Framing Materials Guide*

Maximum Joists Span Guide (Spruce, Pine, Fir)					
Size	8" Joist Spacing	12" Joist Spacing	16" Joist Spacing	24" Joist Spacing	Max. Cantilever
2" x 4"	6'11"	6'	5'7"	4'7"	6"
2" x 6"	11'6"	10'	9'1"	8'	12"
2" x 8"	14'11"	12'8"	11'7"	10'2"	16"
2" x 10"	16'	15'	13'7"	11'5"	24"
2" x 12"	17'2"	16'3"	15'7"	13'3"	24"

Deck Framing Guide

Tanzite
STONEDECKS

Maximum Post Spacing Guide (Spruce, Pine, Fir) - (Beam Span)						
Beam Size	< 8' Joist span	< 10' Joist span	< 12' Joist span	< 14' Joist span	< 16' Joist span	Max. Cantilever
Double 2" x 6"	4'5"	3'11"	3'7"	3'3"	2'10"	12"
Double 2" x 8"	5'8"	5'1"	4'7"	4'3"	3'10"	16"
Double 2" x 10"	7'	6'3"	5'8"	5'3"	4'10"	16"
Double 2" x 12"	8'2"	7'3"	6'7"	6'1"	5'8"	16"
Triple 2" x 6"	6'5"	5'10"	5'3"	4'10"	4'6"	12"
Triple 2" x 8"	10'	9'4"	8'7"	7'11"	7'5"	16"
Triple 2" x 10"	12'10"	11'6"	10'6"	9'8"	9'1"	24"
Triple 2" x 12"	14'11"	13'4"	12'2"	11'3"	10'6"	24"
Quad 2" x 6"	8'3"	7'4"	6'8"	6'2"	5'9"	12"
Quad 2" x 8"	11'	10'3"	9'8"	9'2"	8'7"	16"
Quad 2" x 10"	14'11"	13'1"	12'1"	11'2"	10'6"	24"
Quad 2" x 12"	17'2"	15'4"	14'	13'	12'2"	24"
* This is a guide, Always follow your local building codes.						